Ultrasonic Spray Nozzle Systems

Sono-Tek Corporation

Leadership through innovation since 1975

When Precision Counts…

Ultrasonic spray nozzle systems are replacing pressure nozzles in a wide range of industrial and R&D applications. Concerns over the environment and unacceptable quantities of waste have caused scientists, engineers and designers to adopt ultrasonic spraying systems as a technology that is more precise, more controllable, and more environmentally friendly.

Sono-Tek ultrasonic nozzles, with their characteristic soft spray, dramatically reduce overspray, which saves money and reduces atmospheric contamination. They also open up a broad range of new application possibilities. They are ideal, for example, when extremely low flow rates are required. And since they will not clog or wear out, they help reduce downtime in critical manufacturing processes.

For substrate coatings, moisturizing, spray drying, web coating, fine-line spraying, and many other industrial and R&D applications, Sono-Tek ultrasonic nozzles yield results far superior to other techniques.

Sono-Tek Ultrasonic Nozzles reduce:

- Material consumption by up to 80%
- Wasteful overspray and atmospheric contamination
- Waste disposal
- Servicing and downtime

Versatile, Reliable, Consistent

- Spray patterns are easily shaped for precise coating applications
- Highly controllable spray produces reliable, consistent results
- Non-clogging
- No moving parts to wear out
- Corrosion-resistant titanium and stainless steel construction
- Ultra-low flow rate capabilities, intermittent or continuous

Serving an Entire Spectrum of Industry and R&D Needs

For any application requiring the precise, controllable spray application of a liquid, Sono-Tek ultrasonic nozzles offer reliable, repeatable performance. Typical applications include:

Semiconductor/Electronics

- Dispensing photolithographic chemicals onto semiconductor wafers and flat panel displays
- Precision fluxing on SMT circuit boards and components using our Accu•Mist™ system
- Fluxing through-hole circuit boards using our SonoFlux 9500 Spray Fluxer
- Lubricating computer hard disks
- Microsphere deposition on flat panel displays
- Superconductor substrate coatings

Medical/Biomedical

- Coatings for blood-collection tubes
- Microencapsulation of pharmaceuticals
- Pharmaceutical spray drying
- Coatings for diagnostic test kits
- Protein, enzyme and reagent coatings

General/Industrial

- Fragrance, flavor, and oil coatings
- Ceramic spray drying
- Slurry/suspension atomization
- Solvent and adhesive bonding
- Chemical reaction chambers

Web Coatings

- Float glass, paper, and textiles

Ultrasonic Atomization with Sono-Tek Ultrasonic Spray Nozzles

The Process

Ultrasonic nozzles employ high-frequency sound waves to produce atomization. Disc-shaped ceramic piezoelectric transducers receive high frequency electrical energy from the Sono-Tek Broadband Ultrasonic Generator, described on page 9, and convert that energy into vibratory mechanical motion at the same frequency. The transducers are coupled to two titanium cylinders that amplify the motion.

The excitation created by the transducers produces standing waves along the length of the nozzle, the amplitude of which is maximized at the atomizing surface, located at the end of the small diameter portion of the nozzle. The small diagram below shows how the amplitude varies along the axis. Both ends of the nozzle are anti-nodes, planes of maximum amplitude. A node, where the amplitude is zero, is located at the interface between the transducers. The step transition from the large to the small diameter of the front horn provides the required amplification at the atomizing surface.

Since both ends are anti-nodes, the nozzle's length must be a half-wavelength or a multiple of a half-wavelength. Wavelength is dependent upon operating frequency, so nozzle dimensions are governed by frequency. In general, high-frequency nozzles are smaller, create smaller drops, and have a lower flow capacity than nozzles that operate at lower frequencies (see Flow Rate Capacities table on page 7).

Construction

The nozzle body is fabricated from titanium because of its outstanding acoustical properties, high tensile strength, and excellent corrosion resistance. The protective housing is fabricated from 316 stainless steel. Liquid is introduced onto the atomizing surface through a large, non-clogging feed channel running the length of the nozzle. Liquid emerging onto the atomizing surface absorbs the vibrational energy, causing it to atomize.

Energy Control

The vibrational amplitude must be carefully controlled. Below the so-called critical amplitude, there is insufficient energy to produce atomization. If the amplitude is too high, the liquid is literally ripped apart, and large "chunks" of fluid are ejected. Only within a narrow band of input power is the amplitude ideal for producing the nozzle's characteristic fine, low-velocity spray.

The level of input energy is what distinguishes ultrasonic nozzles from other ultrasonic devices such as welders, emulsifiers, and ultrasonic cleaners. Those devices rely on input power on the order of hundreds to thousands of watts. For ultrasonic atomization, power levels are generally from 1 to 15 watts.

Flow Rates

Since the atomization mechanism relies only on liquid being introduced onto the atomizing surface, and not pressure, the rate at which a liquid is atomized depends solely on the rate at which it is delivered to the surface. Therefore, every ultrasonic nozzle has an inherently wide flow rate range. In theory, the "turn down" ratio (ratio of maximum to minimum possible flow rate) is infinite. In practice, this ratio is limited to approximately 5:1.

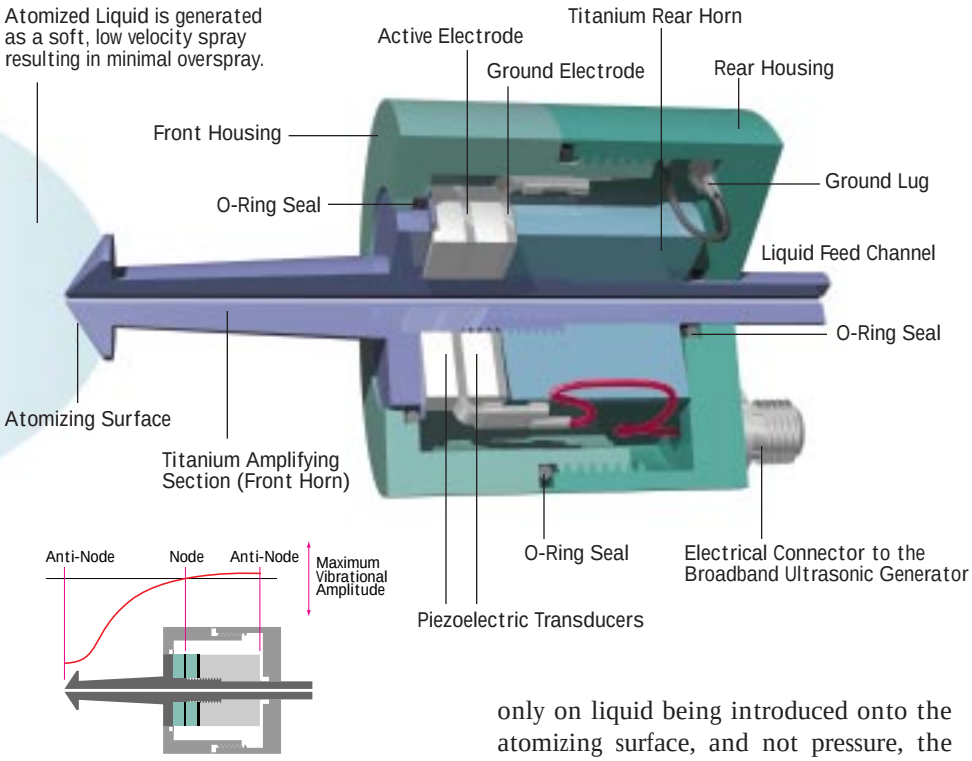

Spray Patterns

Nozzle Specifications

The illustration on the left in the diagram below indicates a cone-shaped spray pattern resulting from the conically shaped atomizing surface. Typically, spray envelope diameters from 2-3 inches can be achieved.

The center illustration is characteristic of Sono-Tek MicroSpray™ nozzles. For this type of nozzle, the orifice size ranges from 0.015-0.040 inches. It is usually recommended for use in applications where flow rates are very low and narrow spray patterns are needed.

The illustration on the right depicts a cylindrical spray shape used in applications where the flow rate can be relatively high, but where the lateral extent of the spray pattern must be limited.

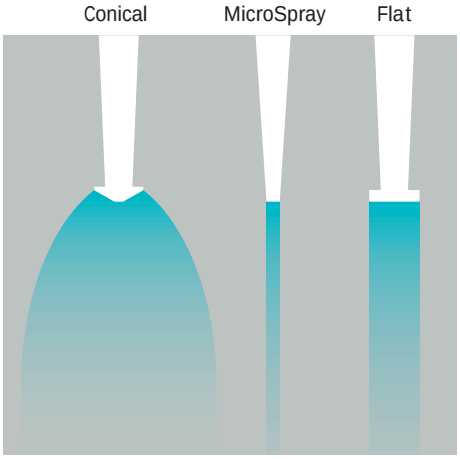

The following product descriptions provide basic information about standard Sono-Tek nozzles. Other configurations are available to accommodate specific requirements.

All maximum flow rates quoted are approximate and have been measured using water at room temperature and standard atmospheric pressure. Refer to the Flow Rate Capacities table on page 7 for further details about recommended configurations for specific flow rates.

Materials

Lead zirconate-titanate transducers
Titanium alloy body (Ti-6Al-4V)
316 stainless steel housing
Kalrez® and Viton® o-rings
Stainless steel SMA electrical connector

Liquid Inlet

316 stainless steel Swagelok® fitting (standard sizes for 1/4", 1/8", and 1/16" tubing)

Operating Temperature Range

- 20°C to 150°C (-4°F to 302°F)

External Pressure Range

Vacuum to 100 psi

Specifications

Model	Operating Frequency (kHz)	Maximum Flow Rate* (gph or ml/s)	Median Drop Dia (microns)	Weight (g)
8700-25	25	3.3	70	468
8700-35	35	6.0	49	773
8700-48	48	2.4	38	309
8700-48H	48	1.2	38	258
8700-60	60	1.2	31	195
8600-6015	60	0.3	31	251
8700-120	120	0.4	18	196

*Based on maximum orifice diameters for each model. MicroSpray™ series nozzles are limited to 0.3 gph(ml/s) max. flow rate.

Nozzle Styles

Figure 1

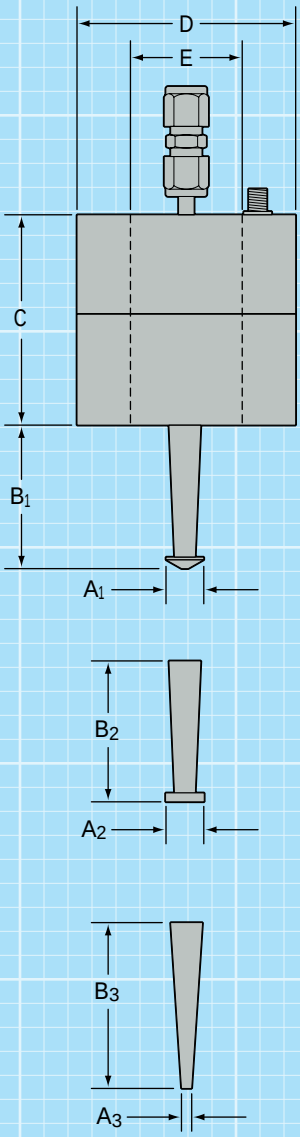

Figure 2

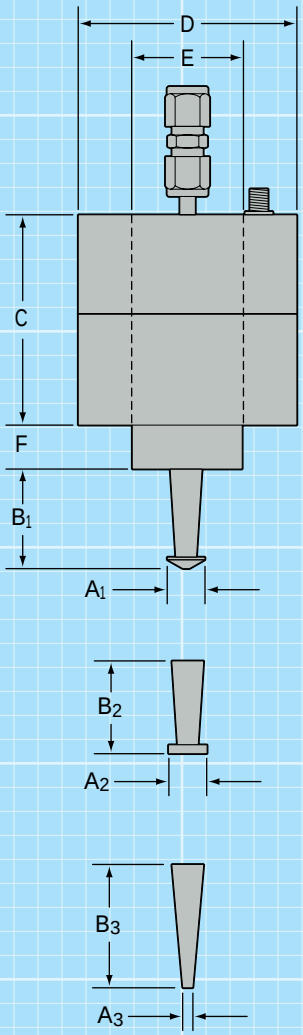

Figure 3

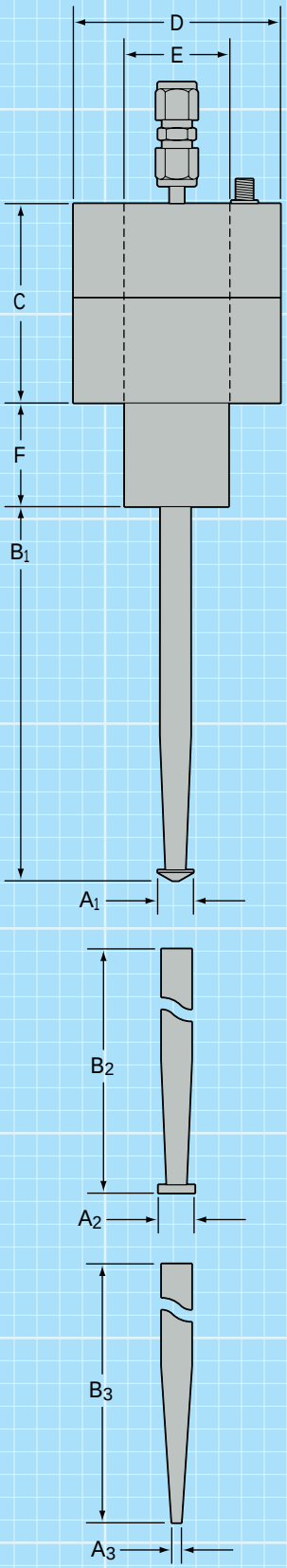

Dimensions for Standard Nozzles inches(mm)
Other configurations are available.

Model	Fig	A_1	B_1	A_2	B_2	A_3	B_3	C	D	E	F
8700-25	1	0.46 (12)	2.25 (57)	0.35 (9)	2.08 (53)	0.12 (3)	2.76 (70)	2.5 (63)	1.69 (43)	1.00 (25)	—
8700-35	1	0.65 (17)	1.46 (37)	—	—	—	—	2.1 (53)	2.44 (62)	1.50 (38)	—
8700-48	1	0.46 (12)	1.06 (27)	0.46 (12)	0.86 (22)	0.12 (3)	1.47 (37)	1.5 (38)	1.69 (43)	1.00 (25)	—
8700-48H	1	0.46 (12)	0.89 (23)	0.46 (12)	0.61 (15)	0.09 (2)	1.40 (36)	1.5 (38)	1.69 (43)	0.75 (19)	—
8700-60	1	0.35 (9)	0.83 (21)	0.35 (9)	0.75 (19)	0.09 (2)	1.13 (29)	1.3 (33)	1.44 (37)	0.75 (19)	—
8600-6015	3	0.25 (6)	2.51 (64)	0.25 (6)	2.43 (62)	0.09 (2)	2.79 (71)	1.4 (36)	1.44 (37)	0.75 (19)	1.17 (30)
8700-120	2	0.23 (6)	0.44 (11)	0.23 (6)	0.40 (10)	0.09 (2)	0.56 (14)	1.0 (25)	1.44 (37)	0.50 (13)	0.34 (9)

Drop Size Distribution

In an ultrasonically produced spray, drop size is governed by the frequency at which the nozzle vibrates, and by the surface tension and density of the liquid being atomized. Frequency is the predominant factor. Median drop size is inversely proportional to frequency to the 2/3 power. The higher the frequency, the smaller the median drop size.

Typically, the drop-size distribution from ultrasonic nozzles follows a log-normal curve, which has the familiar bell shape, but on a logarithmic scale. The chart below shows this distribution for water on a cumulative basis at various frequencies.

Several parameters characterize the mean and median drop size of a particular distribution. The *number median diameter* defines the 50% point in drop size; that is, one-half of the number of drops in the spray have diameters larger than this value while the other half have diameters smaller than this value.

The *number mean* and *weight mean diameters* are average diameters. The number mean diameter is obtained by adding together the diameter of each drop in a spray sample and dividing that sum by the number of drops in the sample. The weight mean diameter is obtained by adding together the volume of each drop in a spray sample (volume is proportional to diameter cubed), taking the cube root of this sum, and finally dividing by the number of drops. The *Sauter mean diameter* is a parameter used primarily in combustion applications. It measures the effective ratio of drop volume to surface area.

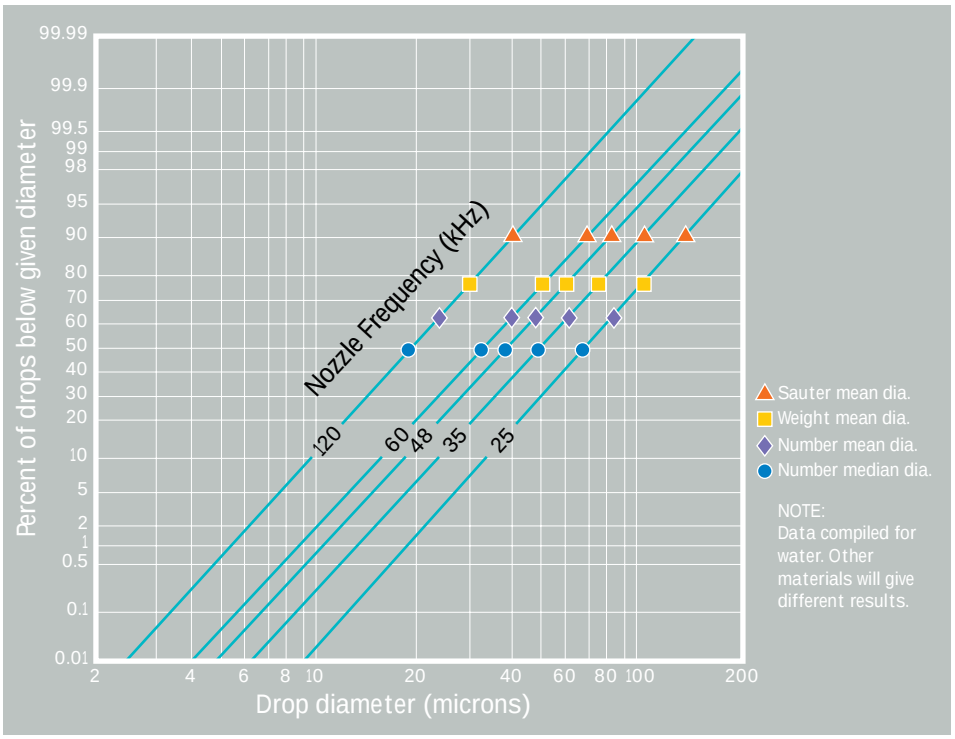

Spray Velocity and Flow Rate Range Capabilities

Sono-Tek ultrasonic nozzles produce a soft, low-velocity spray that eliminates the overspray typically associated with pressure nozzles. Spray velocities are in the range 0.7-1.2 feet per second, compared to 35 - 70 feet per second for pressure nozzles.

The unpressurized nature of ultrasonic atomization allows Sono-Tek to offer nozzles over a wide spectrum of flow rate ranges. For example, our MicroSpray™ series of nozzles can handle flow rates from µl/m to approximately 0.3 gph (0.3 ml/s), depending on orifice size. Our highest capacity nozzle is rated at 6 gph (6 ml/s).

Flow Rate Capacities

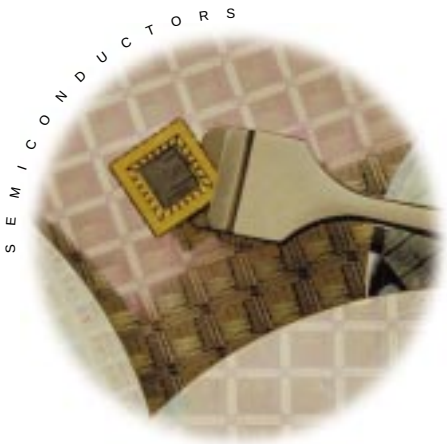

The flow rate range is governed by four factors: orifice size, atomizing surface area, frequency, and liquid characteristics.

Orifice size plays a principal role in determining both maximum and minimum flow rates. Maximum flow rate is related to the velocity of the liquid stream as it emerges onto the atomizing surface. The atomization process relies on the liquid spreading out onto this surface. At low stream velocity, surface forces are sufficiently strong to "attract" the liquid, and cause it to cling to the surface. As the velocity of the stream increases, a velocity is reached where the stream becomes totally detached from the surface, preventing atomization.

In theory, there is no lower limit to flow rate since the process is independent of pressure. However, in practical terms, a lower limit does exist. As the flow is reduced, a point is reached where the velocity becomes so low that the liquid emerges onto the atomizing surface haphazardly, causing the atomization pattern to become distorted. Typically, the minimum velocity of the liquid stream from an orifice of a given size is about 20% of the maximum velocity.

The amount of **atomizing surface area** available is another factor influencing maximum flow rate. There is a limit as to how much liquid an atomizing surface can support and still sustain the film that is required to produce atomization. If the quantity "dumped" onto the surface becomes too great, it overwhelms the capability of the surface to sustain the liquid film.

The maximum flow rate depends not only on the amount of surface area available, but also on a nozzle's operating **frequency**. As a result of the dynamics of the process, lower frequency nozzles can support greater flow rates than higher frequency nozzles with the same atomizing surface area.

Finally, the **nature of the liquid** has a significant effect on maximum flow rate. This factor is discussed in the section on Liquid Compatibility on page 8.

In every instance, one of these factors will set the maximum flow rate. The table below lists, for each available frequency classification, the maximum flow rates of water for typical combinations of atomizing surface diameters and orifice sizes. Maximum flow rates for other liquids may vary significantly from these values.

Flow Rate Capacities for Water (gph or ml/s)

		MicroSpray™ Series Orifice Size (in)			Standard Series Orifice Size (in)					
Freq (kHz)	**Tip Dia.** (in)	**0.015**	**0.030**	**0.040**	**0.052**	**0.067**	**0.086**	**0.100**	**0.141**	**0.250**
25	0.090	0.04	0.15							
	0.120	0.04	0.15	0.25						
	0.350	0.04	0.15	0.30	0.45	0.8	1.2	1.7	2.0	
	0.460	0.04	0.15	0.30	0.45	0.8	1.2	1.7	3.3	
	0.500	0.04	0.15	0.30	0.45	0.8	1.2	1.7	3.3	
35	0.650									6.0
48	0.090	0.04	0.08							
	0.120	0.04	0.15	0.15						
	0.400	0.04	0.15	0.30	0.45	0.8	1.2	1.7	1.8	
	0.460	0.04	0.15	0.30	0.45	0.8	1.2	1.7	2.4	
	0.500	0.04	0.15	0.30	0.45	0.8	1.2	1.7	2.9	
60	0.090	0.04	0.07							
	0.120	0.04	0.15	0.15						
	0.300	0.04	0.15	0.30	0.45	0.8	0.9	0.9		
	0.350	0.04	0.15	0.30	0.45	0.8	1.2	1.2		
	0.460	0.04	0.15	0.30	0.45	0.8	1.2	1.7		
120	0.090	0.04	0.05							
	0.120	0.04	0.08	0.08						
	0.230	0.04	0.15	0.30	0.35					

Liquid Compatibility

Sono-Tek Liquid Delivery Systems Ensure Optimum Nozzle Performance

Several factors affect the ability of a liquid to be atomized. These include viscosity, solids content, miscibility of components, and the specific dynamic behavior of the liquid. There are no hard-and-fast rules governing a liquid's atomizability using ultrasonics. Some liquids that seem easy to atomize at first can prove difficult, while others that seem impossible actually perform well.

There are, however, guidelines that offer a good indication of the probability for success.

Liquids can be categorized as follows:

- Pure, single component liquids (water, alcohol, bromine, etc.)
- True solutions (salt water, polymer solutions, etc.)
- Mixtures with undissolved solids (coal slurries, polymer beads/water, silica/alcohol, suspensions, etc.)

For pure liquids, the only factor limiting atomizability is viscosity. In general, the upper limit of viscosity is on the order of 50 cps.

True solutions, for the most part, behave the same as pure liquids, except when the solution contains very long-chained polymer molecules. In that case, the polymer molecules can interfere with the atomization process because of their length. Such molecules will inhibit the formation of discrete drops when they span the region of the bulk liquid where two or more drops are about to be formed.

For mixtures with undissolved solids, there are three major factors that influence atomizability. These are: particle size, concentration of solids, and the dynamic relationship between the solid(s) and carrier(s).

If the particle size is more than one-tenth the median drop diameter, the mixture may not atomize properly. For drops that contain one or more solid particles, their size must be significantly greater than the size of the solid. If not, there is a good chance that a majority of the drops will form without entrapping the solid component, causing separation.

The concentration of solids is important. A practical upper limit on solids concentration is about 40%. Conditions must be just right in order to achieve atomization at higher concentrations. Finally, even if the particle size is appropriate, atomizability is affected by other dynamic factors such as the viscosity of the carrier and the ability of the solid component to remain suspended.

Since a liquid delivery system is required for every spray application, it is important to specify a system that is optimized for performance with Sono-Tek nozzles. We can provide a wide range of properly interfaced liquid delivery systems, including the following:

- Gear pumps for continuous flow
- Piston pumps for continuous flow or metered applications
- Syringe pumps for metered volume applications where precise dispensing is required
- Pressurized systems for continuous flow or metered applications
- Gravity systems for research and laboratory environments

The Sono-Tek Broadband Ultrasonic Generator

Freestanding Unit

The Broadband Ultrasonic Generator delivers the high frequency electrical energy required to operate all Sono-Tek ultrasonic atomizing nozzles.

This versatile, rugged state-of-the-art power generator, designed and manufactured by Sono-Tek, incorporates features that simplify process control and enhance the operation of our nozzle systems.

- Operates over a frequency range of 20 - 120 kHz (frequency is user selectable for any nozzle within this range)
- Uses advanced phase-locked-loop control technology to automatically lock onto a nozzle's specific operating frequency
- Provides both audible and visual alarms in the event of system malfunction
- Contains an output for connection to a remote alarm
- Can be triggered on/off by an external control signal
- Contains an LCD power meter and power level control for setup and monitoring of nozzle operation
- Contains an input for remote power level control
- Is available in two versions: a 100-240 VAC free-standing unit, and a 24 VDC modular system intended for use in multiple nozzle configurations

Models Available

Free-standing: 100 - 240 VAC
P/N 06-05108
Modular: 24 VDC
P/N 06-05112

Input Power Requirements

Free-standing:
90 - 260 VAC, 50/60 Hz, 75 VA max
Modular:
23 - 25 VDC±5% regulation, 60 VA max

Output Power

15 W max. continuous
20 W max. intermittent

Frequency Range

20 -120 kHz

External Trigger Input

5 - 240 V(AC or DC) or switch closure
P/N 06-01078

External Power Control Input

0 - 10 VDC, 20 kW impedance
P/N 06-01083

Alarm Output

24 VDC or 120 VAC max. relay contacts
P/N 06-01084

Operating Temperature Range

0 - 40° C (32 - 105° F)

Dimensions

Free-standing:
8 1/2" W x 9" D x 2 1/4" H
(216 x 229 x 57 mm)

Modular: 5 1/4" W x 7 1/2" D x 2" H
(133 x 190 x 51 mm)

Weight

Free-standing: 4.3 lbs. (2.0 kg.)

Modular: 1.2 lbs. (0.6 kg.)

Sono-Tek Web-Coating Systems

Sono-Tek offers modular spraying systems for use in coating moving webs of material. The heart of our Web-Coater is a unique air-handling system that fans out and controls the spray from an ultrasonic nozzle, achieving widths up to 15 inches. For wider coverage, several modules are connected together. Typical uniformity of deposition across a web is better than 15%, and since the spray retains its soft characteristics, wasteful overspray and atmospheric contamination is kept to a minimum.

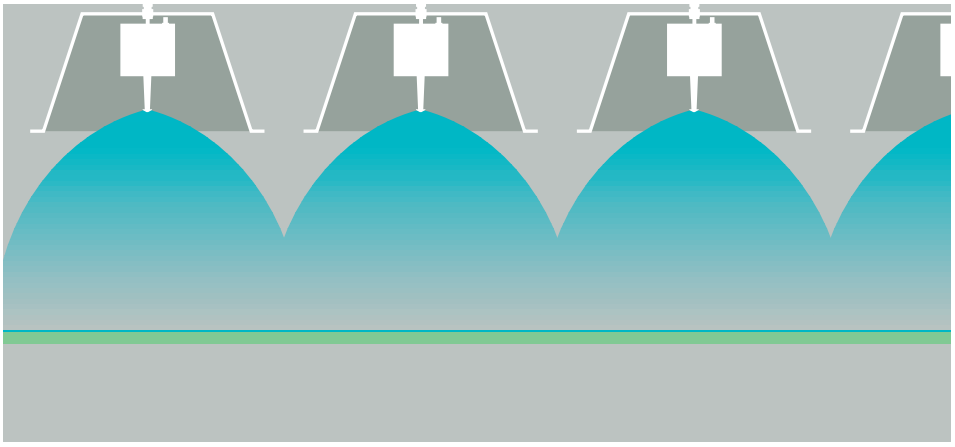

Our Web-Coater multiplies the benefits of Sono-Tek ultrasonic nozzles. Its precise, soft spray and uniform deposition are ideal for coating moving webs of material, without the waste associated with pressure sprays.

SonoFlux 9500 Ultrasonic Spray Fluxing Systems

Using our patented ultrasonic spray technology, the SonoFlux 9500 is the state-of-the-art tool for applying solder flux to circuit-board assemblies prior to wave-soldering. The SonoFlux 9500 is a highly flexible system designed to adapt easily to every installation. It features a user-friendly programmable controller to monitor and control all system functions and a selection of sophisticated options, including totally automatic operation.

SonoFlux 9500 spray fluxing systems:

- Reduce flux usage and VOC emissions up to 80%
- Eliminate thinner usage and titration
- Typically pay for themselves within one year of operation

The SonoFlux 9500 Ultrasonic Spray Fluxer is available as a stand alone system (pictured above) or as a unit for retrofit inside wave-soldering machines. The SonoFlux 9500 is the industry's most reliable, cost-effective system for the application of flux in circuit-board assembly.

From Complete, Automated, Turnkey Systems to Individual Components, Sono-Tek Provides Total Customer Support

With over 20 years of industry leadership in ultrasonic spray technology, Sono-Tek has the experience and expertise to help you integrate our technology into your application. From large-scale, automated turnkey systems, to individual spray system components, Sono-Tek delivers the support you need to take full advantage of the benefits of ultrasonic spraying.

Sono-Tek has extensive experience in providing turnkey systems for a variety of specialized applications. Our engineers will fully assess your requirements, make on-site visits, and prepare detailed specifications. The system will then be designed and fabricated by Sono-Tek to your precise requirements, and after being thoroughly tested prior to shipment, our engineers and service technicians will install it and train your staff on operation and maintenance.

We at Sono-Tek Corporation want you to be 100% satisfied with the quality and reliability of our products. We are available to answer your equipment or process questions, and you can count on us to provide unique and creative solutions for optimum results.

For an in-depth technical description of our ultrasonic nozzles and their capabilities, visit our web site: www.loettechnik.com

CE
COMPLIANT

Sono-Tek Corporation

LICO Electronics GmbH, A-2320 kledering, Klederinger Str. 31. www.lico.at www.loettechnik.com office@lico.at